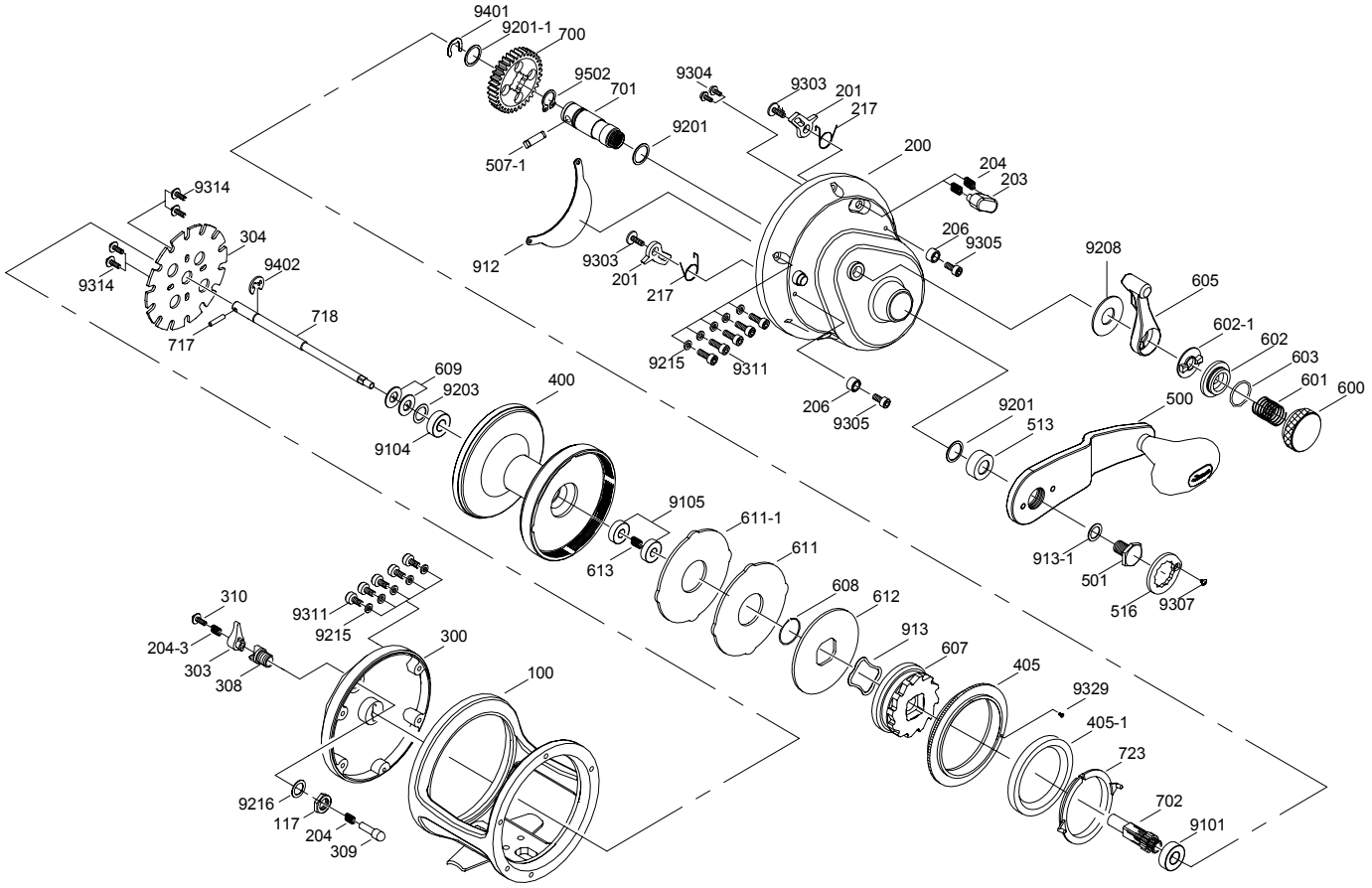

TG - 20S Spare Parts

key no	new part no	old part no	parts name	lot no	key no	new part no	old part no	parts name	lot no
100	11000654	1110005214003	MAIN BODY ASSY.		611-1	16110043	11611014-002	DRAG WASHER	
117	11170006	11117004-13	CLICK BUTTON RETAINER NUT		612	16120017	11612009-06003	KEY WASHER	
200	12000576	1120005804004	HANDLE SIDE PLATE ASSY.		613	16130012	11613010-06	COMPRESSION SPRING	
201	12010012	11201009-06001	ANTI-RE PAWL		700	17000088		DRIVE GEAR	3028
203	12030004	11203003-01001	CONTROL PIN		700	17000174	1170002102	DRIVE GEAR	
204	12040002	11204002-06	COMPRESSION SPRING		701	17010057	11701032-16001	DRIVE GEAR SHAFT	
204-3	12040014	11204005-06002	COMPRESSION SPRING		702	17020110	11702016-26003	PINION GEAR	3018
206	12060007	11206007-03001	LEVER DRAG STOPPER CAP		702	17020220	1170202702	PINION GEAR	
217	12170010	11217005-06001	ANTI-RE PAWL SPRING		717	17170004	11717003-06	MAIN SHAFT PIN	
300	13000212	11300029-04012	SIDE PLATE		718	17180080	11718042-16001	MAIN SHAFT	
303	13030017	11303009-04002	CLICK BUTTON		723	17230004	11723001-11001	SILENT RING	3019
304	13040007	11304007-06001	CLICK PAWL		723	17230005	11723001-21001	SILENT RING	
308	13080011	11308002-16002	CLICK BUTTON RETAINER		912	19120004	11912003-04002	COVER BOARD	
309	13090007	11309001-261	CLICK PIN		913	19130001	11913001-05907	SPRING WASHER	
310	13100004	11310001-06002	CLICK PIN SCREW		913-1	19130005	11913002-06001	SPRING WASHER	
400	14000241	11400039-04004A	SPOOL	3031	9101	0910140	01091705-6	BALL BEARING	3032
400	14000249	11400039-14003A	SPOOL		9101	0910146	01091705-616	BALL BEARING	
405	14050013	11405010-11	SPOOL COVER	3031	9104	0910110	01081906-616	BALL BEARING	3032
405	14050012	11405010-01001	SPOOL COVER		9104	0910110	01081906-616	BALL BEARING	
405-1	14050016	11405013-07001	SPOOL COVER		9105	0910030	01061505-6	BALL BEARING	
500	15000099	1150002214003	HANDLE ASSY		9201	0920025	0212x15x0.5-6	WASHER	
501	15010013	11501009-26	HANDLE NUT		9201-1	0920028	0212x15x0.7-6	WASHER	
507-1	15070029	11507008-05001	TRANSMISSION PIN		9203	0920154	028.1x12x0.5-6	WASHER	
513	15130013	11513009-06	HANDLE COVER		9208	0920004	0210.1x23.8x1-00	WASHER	
516	15160019	11516005-06	HANDLE NUT RETAINER		9215	0920074	023.1x5.9x1-1	WASHER	
600	16000027	11600013-03907	CAST CONTROL CAP		9216	0920153	028.1x12x0.5-1	WASHER	
601	16010001	11601001-06	COMPRESSION SPRING		9303	0930188	03312.6x5-61	SCREW	
602	16020006	11602001-15001	ADJUST BLOCK		9304	0930211	03325.2x2x5-61	SCREW	
602-1	16020010	11602005-01001	ADJUST BLOCK		9305	0930337	03613.0x7.5-61	SCREW	
603	16030001	11603001-07	O RING		9307	0930129	03212.6x5.5-617	SCREW	
605	16050073	11605013-14004	LEVER DRAG		9311	0930331	03613.0x10-617	SCREW	
607	16070033	11607009-16002	PINION GUARD		9314	0930229	03412.6x5.5-617	SCREW	
608	16080004	11608003-06	DRAG WASHER RETAINER		9329	0930199	03313.5x4.5-617	SCREW	
609	16090007	11609006-05907	SPRING WASHER		9401	19000006	11900007-06001	E RETAINER	
611	16110032	11611014-01001	DRAG WASHER		9402	19000004	11900004-06	E RETAINER	
611-1	16110031	11611014-001	DRAG WASHER	3001	9502	19010016	11901009-06001	C RETAINER	